1 Door Wall Cabinet

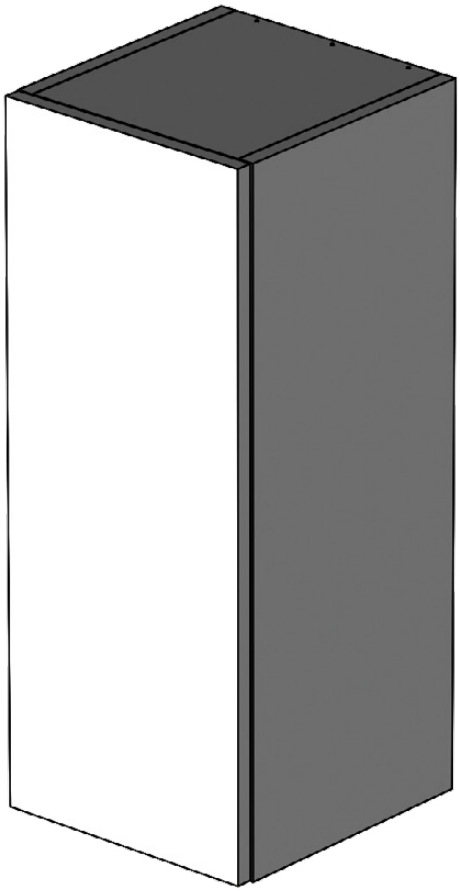

Tools

To assemble this product you will require:

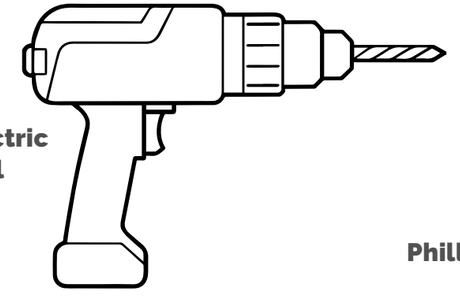

Electric Drill

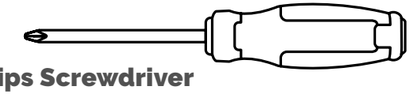

Phillips Screwdriver

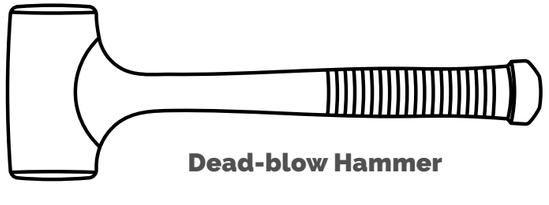

Dead-blow Hammer

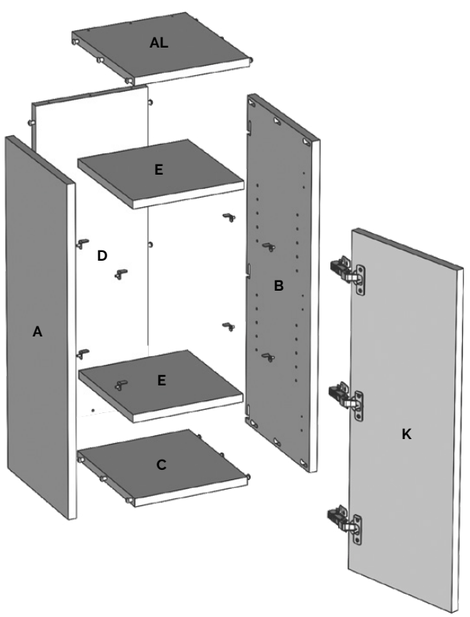

Part	Qty	Part Name
A	1	Wall Side Left
B	1	Wall Side Right
C	1	Bottom Wall
D	1	Wall Back
E	2	Shelf Wall
AL	1	Top
K	1	Door Base Left/Right

Click here to watch our assembly video.

QR code

Invisa-lock™

This cabinet uses our advanced Invisa-lock™ connection method.

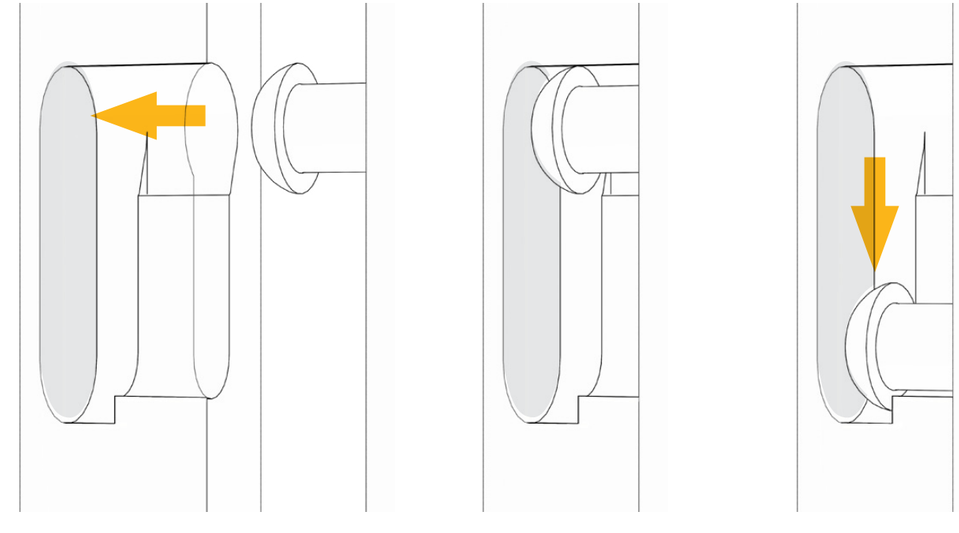

General Assembly Techniques:

1. **Ensure the larger offset of the Invisa-lock™ connector is always positioned facing to the outside of the cabinet.**
2. **Always ensure each panel is flush otherwise this could lead to improper assembly.**
3. **Do not fully engage the locking system until prompted in the instructions. To fully engage the locking system, ensure all parts are aligned and flush, then use a deadblow hammer to gently tap all joining parts into a locked position.**

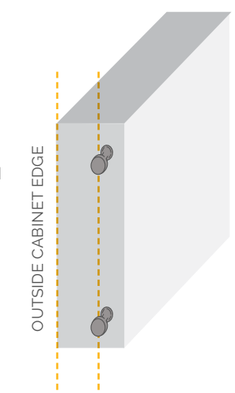

Note:
The connector is offset on the panel. The offset must face the outside of the cabinet.

Equipment

To assemble this product you should have:

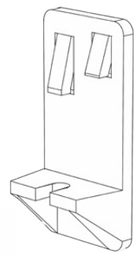

8 x Shelf Clip

Adjustable shelf clip, earth quaked rated, dual pin, used in all standard base and wall cabinetry. Installation before cabinet assembly recommended.

Standard Stainless Steel Hinge and Plate (3 Hinges)

Plate is detachable for easy door removal.

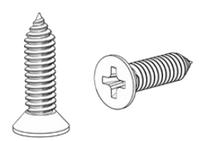

#8 x 5/8" Stainless Steel Phillips Flat Head Screw (12pcs.)

Used for hinge installation. Only install these screws in the back slotted holes of the hinge plate until cabinets are installed level and door alignment is complete.

#6 x 1 3/4" Stainless Steel Phillips Head Screw (6pcs.)

These screws are used for assembly of cabinet parts. Bottom shelf to back panel, drawer bottom to drawer side and drawer front and back.

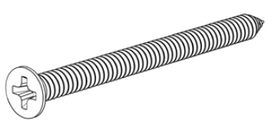

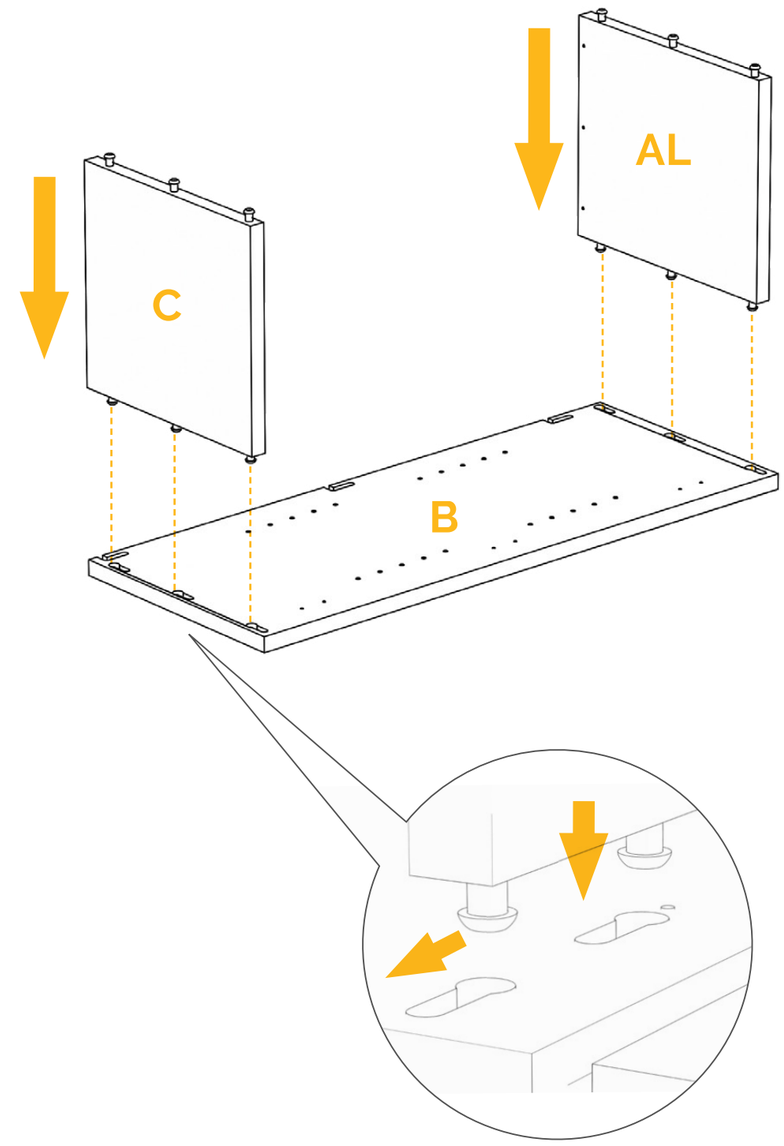

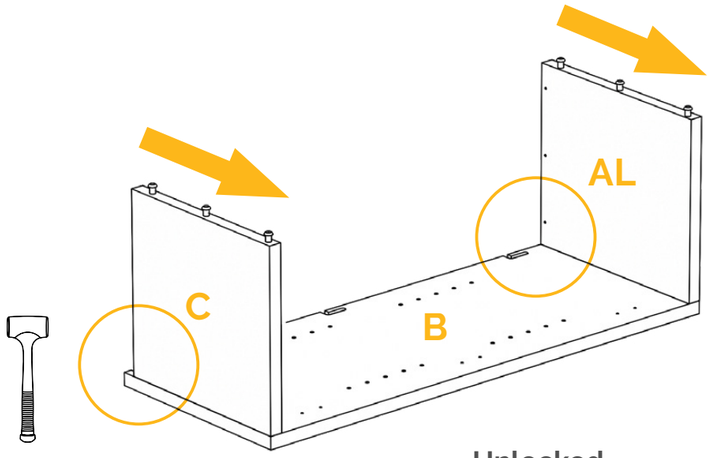

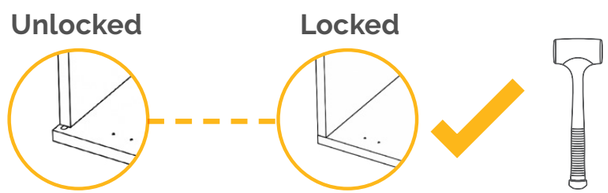

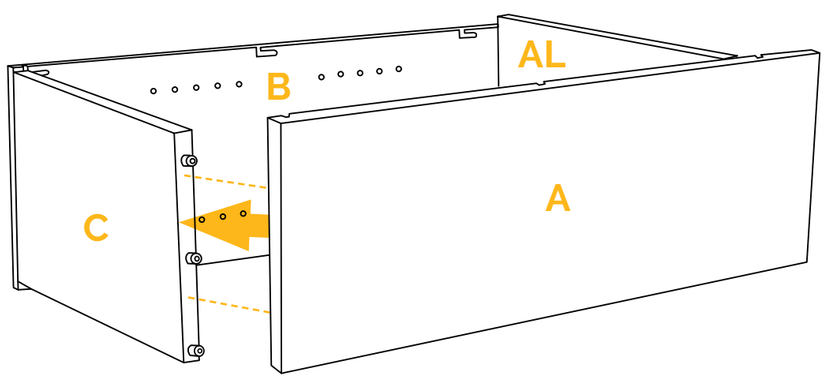

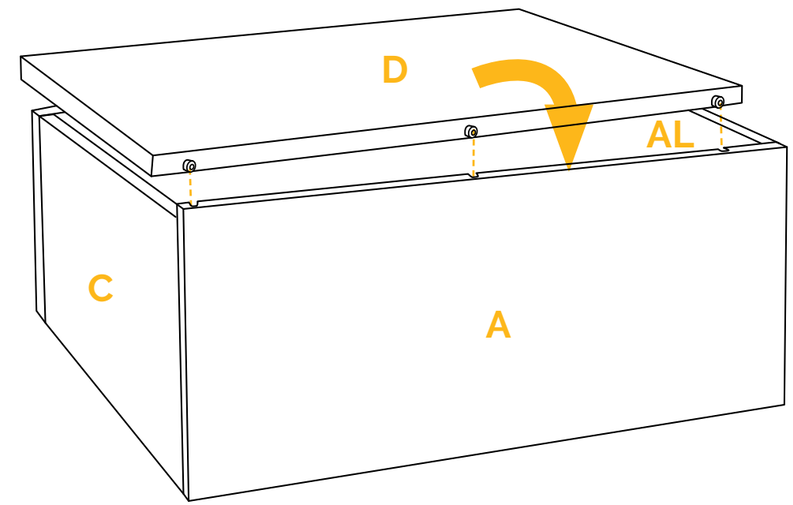

WALL CABINET

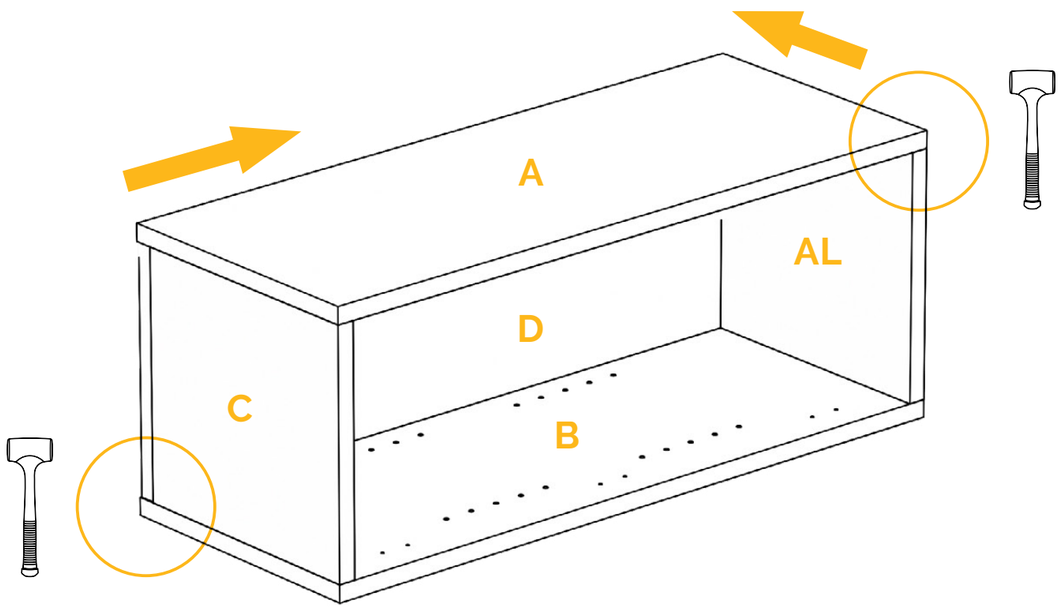

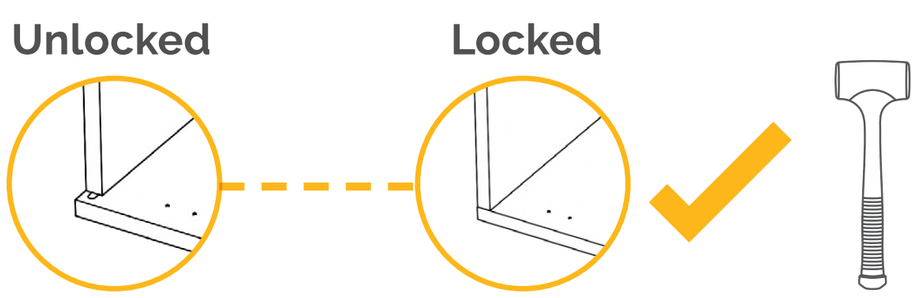

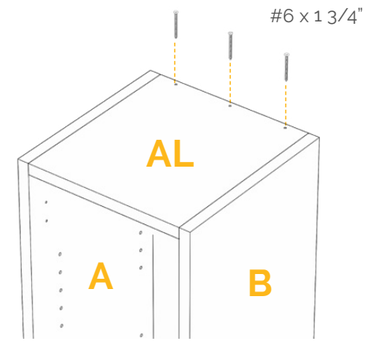

Secure wall top Part AL, to wall back Part D.

Secure wall back Part D, to wall bottom Part C,

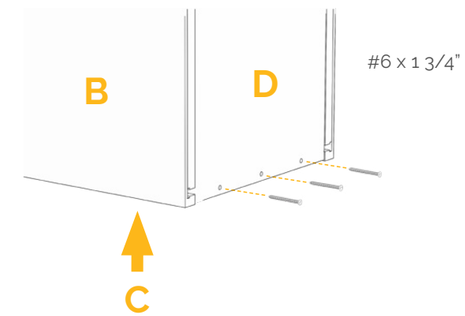

Install the shelf clips at the desired height on the wall side Part B, and Part A.

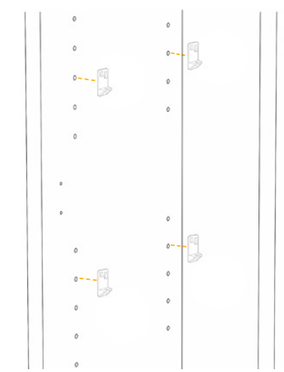

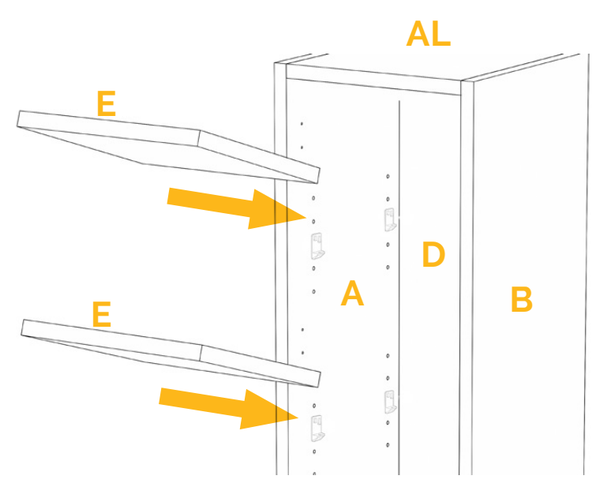

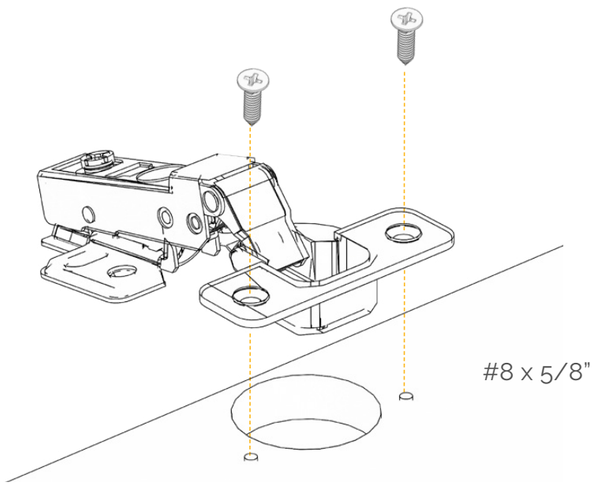

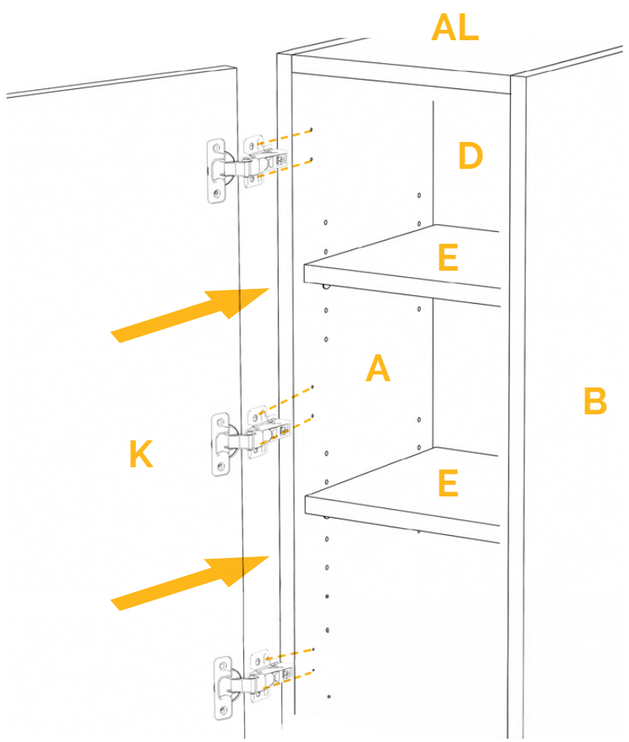

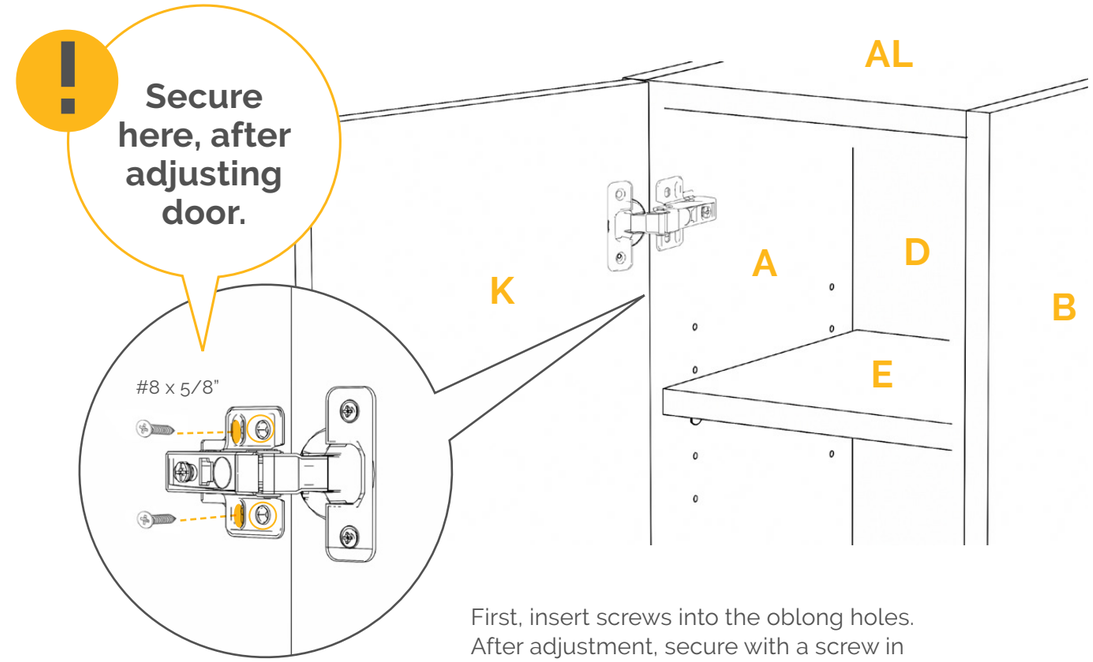

First, insert screws into the oblong holes. After adjustment, secure with a screw in the round hole.

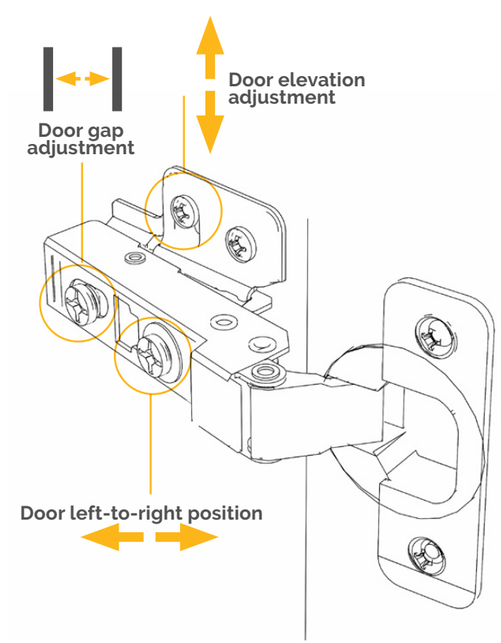

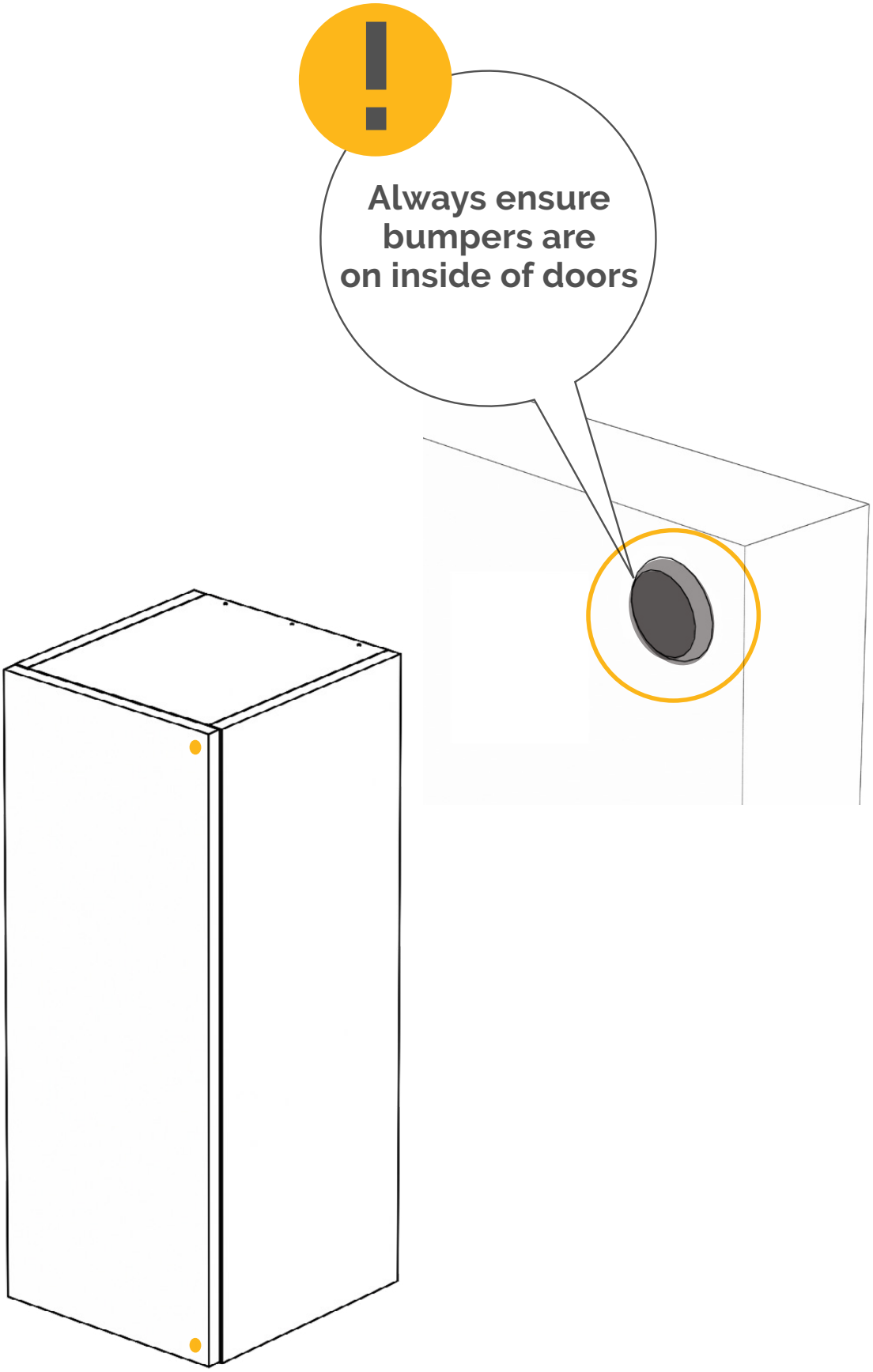
Always ensure bumpers are on inside of doors