Endura®
Outdoor-Indoor Cabinetry

INSTALLATION GUIDE

STEP-BY-STEP INSTRUCTIONS FOR
INSTALLING **ENDURA OUTDOOR CABINETS.**

READ BEFORE INSTALLING ENDURA OUTDOOR CABINETRY

This guide provides critical information for the correct installation of Endura Outdoor Cabinetry.

Project-specific variables such as design layout, configuration, site conditions, and space limitations may necessitate deviations from these general instructions.

For best results and long-term durability, installation should be handled by a licensed contractor or an experienced cabinetry professional.

All installations must comply with the following:

Observe Local Building Codes: Before proceeding with the installation of your cabinetry and appliances, it is of utmost importance to prioritize local building codes. Familiarize yourself with all relevant codes and regulations to ensure full compliance.

High Wind Areas: In regions prone to high winds, such as rooftops or tornado/hurricane-prone areas, building codes may necessitate securing the cabinetry to an immovable structure. This could involve attaching it to a wall, floor, or concrete base for added stability and safety.

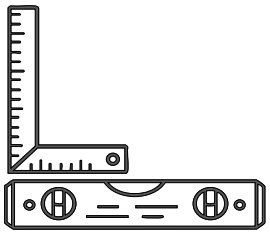

Proper Installation Requires Level, Square, and Plumb Cabinets: To guarantee a seamless installation of Endura Outdoor cabinetry, each cabinet must be level, square, and plumb. Neglecting this crucial step can lead to issues like improper cabinet door and drawer adjustment and difficulty fitting countertops.

REQUIRED TOOLS:

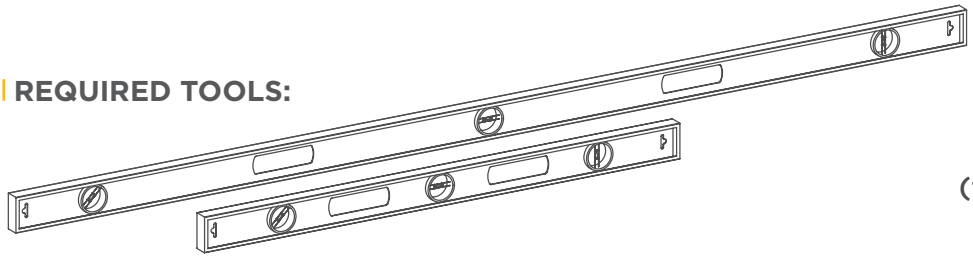

Level(s) – 2ft and 4ft recommended

Plastic Shims
(for leveling if necessary)

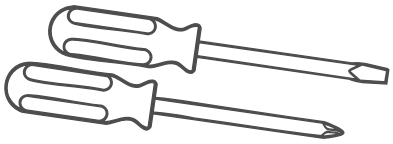

Screwdriver(s)
matching head of selected fasteners

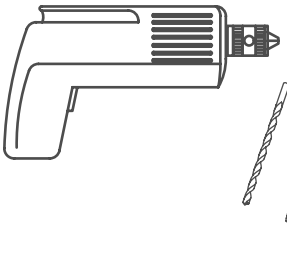

Drill:
- 3/16" Wood Drill Bit (pilot holes in cabinet backs or installation rails)
- 1/8" Wood Drill Bit (pilot holes in cabinets sides to join them together)
- Concrete bit(s) for concrete if applicable

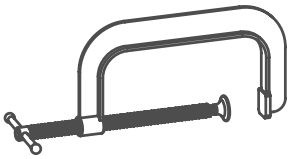

Clamps (with rubber pads)

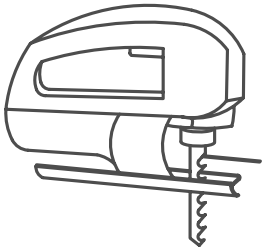

Saw (jig, circular, table, or hole) to trim matching End Panels, Toe-kick, and Fillers

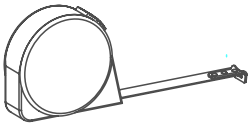

Tape Measure

ESSENTIAL SAFETY GUIDELINES FOR INSTALLATION

- **Prioritize Team Lifting:** Ensure safe lifting and moving of cabinetry by utilizing team lifting techniques. A minimum of two people is recommended for cabinet installation, as cabinets are heavy.
- **Turn Off Utilities:** Before beginning the installation, ensure all electrical, water, and gas supplies impacted by the process are turned OFF. For professional assistance with handling these connections, consult a qualified expert.
- **Wear Protective Gear:** Throughout the installation process, wear appropriate safety gear such as safety glasses, gloves, hearing protection, and closed-toe shoes. These precautions safeguard against potential hazards.
- **Use Cabinet Legs or Structural Base:** Generally, cabinet installation necessitates the use of cabinet legs. If opting for a structural base as an alternative, it must be designed to support the weight of the cabinet, countertop, and appliances. The installer is responsible for constructing such a structure properly. Free-standing islands must be anchored to the patio slab or deck to ensure stability. The most reliable method is to use a structural base designed specifically for securing islands to concrete slabs or deck surfaces.

- **Use Recommended Fasteners:** Use fasteners supplied with the cabinetry for hinge, leg, and toe kick installation. For cabinet-to-cabinet attachment purchase stainless steel or equivalent outdoor rated fasteners no smaller than #8 x 1 1/4" length. Attaching the cabinetry to your home structure requires knowledge and understanding of your home's construction method and materials. Select the appropriate fasteners to attach the cabinetry to your structure based the homes construction method or consult a licensed professional.

WARNING! Never use drywall screws, nails, staples, or similar fasteners to mount or secure cabinetry together. Using unauthorized fasteners will void product warranties.

- **Protect Surfaces:** To prevent scratching, place a moving blanket, tarp, or large sheet of cardboard under the cabinet when adjusting or positioning it in place. This will help maintain the surfaces' integrity during the installation process.

PREPARING FOR INSTALLATION: UNPACKING CABINETS

- **Review the Packing List:** Thoroughly inspect the packing list to ensure your order is complete. Should you find any discrepancies, promptly reach out to your Authorized Dealer or Innovation Cabinetry (888.206.1088) for assistance.

- **Handle Unpacking with Care:** During the unpacking process, exercise caution to prevent scratching the product or misplacement of any hardware or accessories.

- **Check Hardware Bags:** Each cabinet includes a hardware bag containing the necessary hinge mounting screws and two or more cabinet leg assembly kits. Verify the presence and accountability of all these items.

- **Remove Doors, Drawers, and Shelving:** Although doors, drawers, and removable shelving are usually pre-assembled before shipping, it is advisable to remove them before installation. Doing so makes it easier to lift and install the cabinets and allows better access to the installation areas.

INSTALLATION SITE PREPARATION

- **Ensure Level and Plumb Installation:** Throughout the installation process, *it is crucial the cabinetry remains level and plumb*. Verify the levelness and plumbness at each step to achieve proper alignment and functionality of the cabinets.

- **Check Floor Pitch:** At the start of the installation, assess the floor for pitch, both side-to-side and front-to-back, to identify the highest point. This highest point will play a significant role in determining the final height of the cabinets. Remember that your selection of under-counter appliances may also impact the cabinet's ultimate height.

- **Complete Cabinet Installation Before Adjusting Doors and Drawers:** Prioritize the full installation of all cabinets, including screwing them together, fitting the countertop, placing the appliances, attaching doors, returning drawers to their original positions, and creating a level surface. Only after completing these steps should you proceed to adjust doors and drawers. Refer to page 9 in the installation guide for instructions on soft-close adjustments if applicable.

By adhering to these instructions, you can achieve a successful and well-aligned installation of your Endura Outdoor Cabinetry while ensuring compliance with local regulations.

LEG ASSEMBLY INSTALLATION

1. Place the cabinet on a soft surface with the door facing upward (Figure. 1).
2. With the bottom of the cabinet facing you, locate the pilot holes. Position the Leg Plates over the pilot holes with the flange facing the outside of the cabinet (Figure 1).
3. If your cabinet requires more than four legs, refer to Figure 4 to position the center legs with the flange facing the cabinet's center.
4. Fasten the Leg Base Plate to the cabinet using a drill set to the *minimum torque speed.* Fasten using the screws provided.
5. Adjust the leg length to 4 1/2". This will create a nominal cabinet height of 34 1/2". Screw the legs into the Base Plate (Figure 2).
6. The legs are designed to hold the vertical weight of the cabinet. Do not tilt the base upward into position (Figure 4); doing so will apply undue pressure to the leg, which may result in breakage. Instead, lift the cabinet to clear the leg assemblies, rotate it 90 degrees upward, and set it down on all four legs. Do not scoot or shove the cabinet into place. Always lift and position (Figure 5) cabinetry into place.

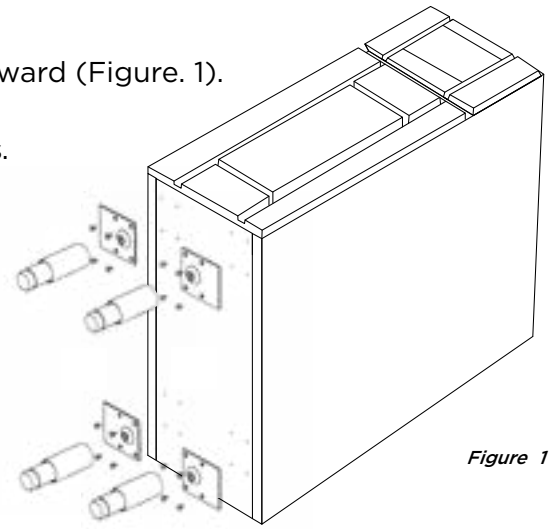

Figure 1

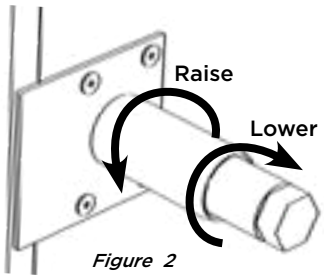

Figure 2

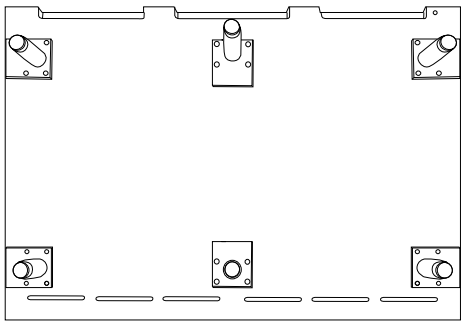

Cabinet Front

Figure 3

7. Place the cabinet into position. Adjust the legs by turning them clockwise to lower and counterclockwise to raise the cabinet.

PRO TIP: Adjust the leg height to approximately 4 1/2", this will be a good starting position for the leveling process.

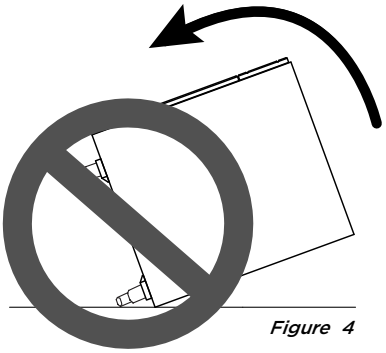

Figure 4

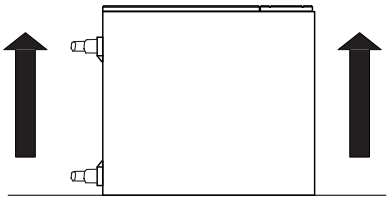

Figure 5

SITE PREPARATION FOR PROPER INSTALLATION

1. Use a minimum 4 ft. long level to achieve the appropriate level for each cabinet.

2. Check the level from corner to corner, left to right, and front to back for each cabinet during installation.

PLEASE NOTE: The target height for base cabinets is 34 1/2 inches, before the countertop is installed.

3. Ensure that each cabinet is vertically plumb to prevent any tilting or leaning.

4. **Always begin at the highest point of the installation site** and establish a level line above the floor from that point.

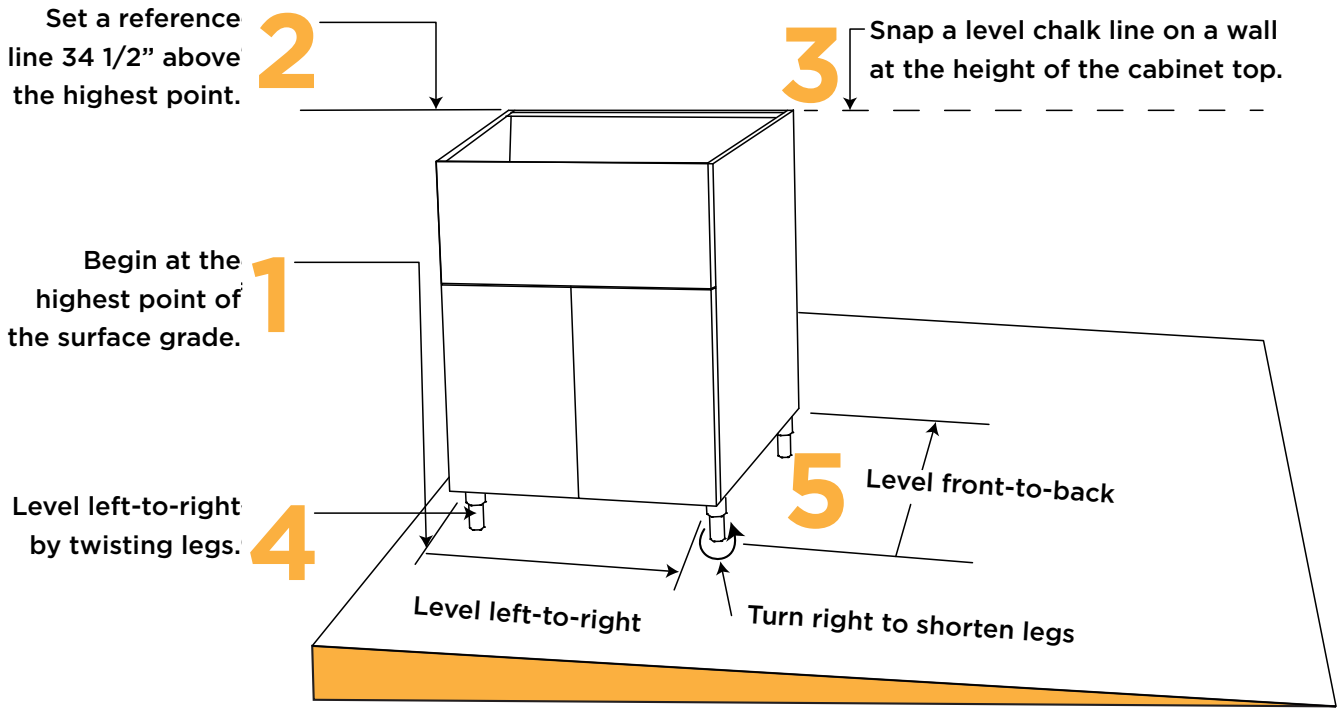

SURFACE GRADE - HIGHEST TO LOWEST

LEVELING THE FIRST CABINET

Leveling plays a crucial role in the installation process, ensuring proper alignment of doors, drawer fronts, and even countertops.

1. Place the first cabinet at the highest point of the desired installation location, refer to diagram on page 6.
2. Adjust the height of the cabinet's legs to get a total cabinet height of approximately 34 1/2". Use a level to ensure the cabinet is level from front to back and side to side (Figure 6). Make necessary leg adjustments until the cabinet is level in both directions.
3. The first cabinet will reference levelness and height for all other base cabinets in the design plan. Ensure it is level, plumb, and square to provide a consistent baseline for the rest of the installation.

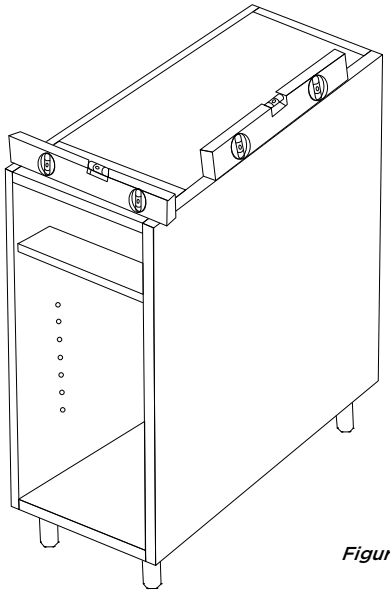

Figure 6

SECURING CABINETS TOGETHER

1. Place the next cabinet in the installation adjacent to the previously leveled cabinet (Figure 7).
2. Utilize the end panel of the cabinets to align them. Ensure the top and bottom edges of the two end panels align front to back, and the front edges are flush with one another.

PRO TIP: Level cabinets together in all directions. All cabinets must be level, plum, and square.

3. Secure the cabinets into position using clamps (Figure 8). Use as many clamps as necessary, placing them at the top and along the sides to maintain proper alignment and stability. Ensure end panels are clamped tightly together at all attachment points prior to fastening.

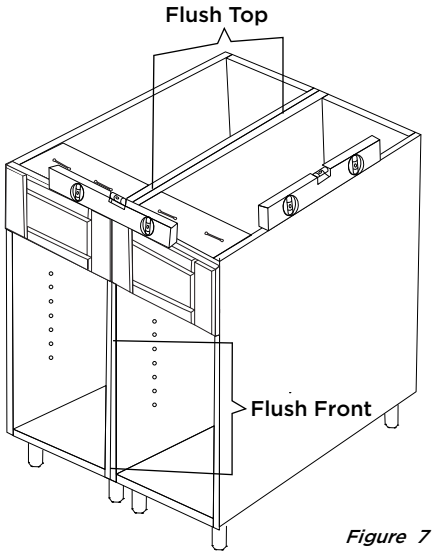

Figure 7

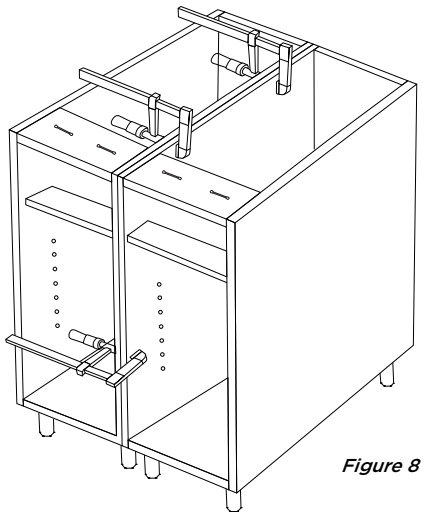

Figure 8

CAUTION: Avoid drilling into areas with drawer glides, hinges, or where connection fittings are located.

PRO TIP: To prevent drilling through both end panels, mark the desired drilling depth on the drill bit using masking tape. The recommended drilling depth should not exceed 1 1/4 inches.

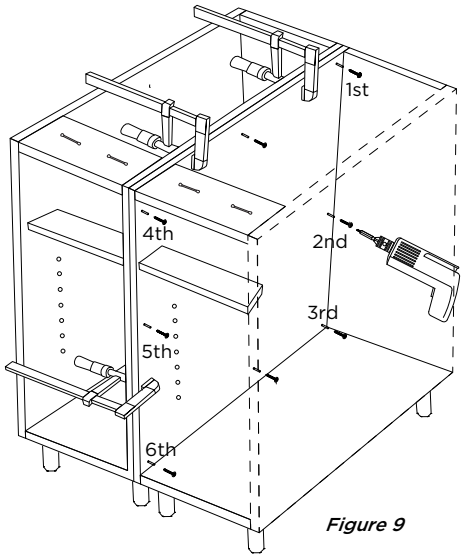

Figure 9

4. On the adjacent cabinet, drill 3 pilot holes along the front edge. Position these holes where they are not visible, above the drawer bridge or behind the hinge plates. Insert a #8 x 1 1/4" stainless steel screw (Figure 9) into each hole and tighten securely.

5. Next, create a second set of holes 1" from the cabinet back panel, running parallel to the front. Insert a #8 x 1 1/4" screw into each hole and tighten it firmly. Finish by inserting screws into the center top and bottom panel (Figure 9). After drilling, use a countersink bit on all holes to ensure the screw heads are flush with the material surface. Sequence: drill, counter sink, insert screw and tighten (Figure 9).

INSTALLING SIDE BURNERS AND GRILL BASES

CAUTION: Prior to installing a heat-producing grill or side burner, it is essential to have an insulated jacket or liner in place. Please consult the grill or burner manufacturer's instructions for the correct installation of the grill jacket or liner.

1. For easy installation, safely remove and store the doors and false-front.

2. Place the grill cabinet on its back and attach the legs using the instructions on page 6. Adjust the leg height to approximately 4 1/2 inches, this aids in the leveling process. Once the legs are installed, set the grill cabinet upright (Figure 5).

3. Follow the instructions on pages 7-8 to attach the grill cabinet to the series of cabinets in your design.

4. Grill cabinets include removable false-front which will need to be cut according to the grill or side burner manufacturer's instructions.

PRO TIP: When cutting the height of the appliance in the false-front, **remember to account for the countertop thickness**.

WARNING: Always, always use grill insulated jackets or liners with Endura cabinetry to ensure proper insulation and safety.

5. Mark the necessary cutouts for the liner on the false-front. Before cutting, consider the countertop thickness and cut accordingly using a saw.

6. After cutting the false-front, snap into position on the front of the grill cabinet.

PRO TIP: We strongly recommend employing a licensed professional to install gas appliances and insulated jackets. Many grill and side burner retailers offer installation services.

7. Base grill cabinets are designed with precut ventilation. The appliance manufacturer or local codes may require additional ventilation. Additional ventilation may be cut in the field to satisfy the manufacturer's ventilation requirement.

INSTALLING A TOE KICK

1. Using a saw with a blade suitable for cutting wood and plastics, cut the Toe-kick to the appropriate length and height for the cabinet run.

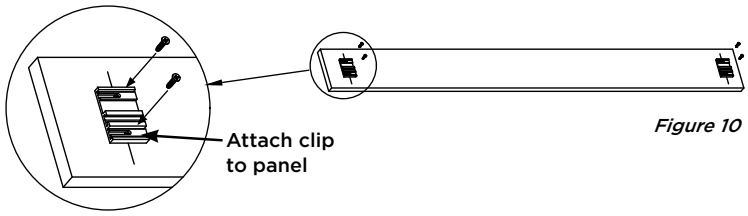

Figure 10

2. Place the cut Toe-kick on the ground before the cabinets, ensuring the legs are easily visible.

3. Retrieve the Clip Plate and screws included with the Leg Assembly Kit.

4. Position the Clip Plate horizontally centered on the Toe-kick, aligning the holes in the plate with the adjustable legs (Figure 10). You can mark the opening of the plate onto the Toe-kick using a Sharpie® or secure the plate to Toe-kick by placing a screw into each hole on the Mounting Plate using a screwdriver or drill.

PRO TIP: Use a white or silver Sharpie® on dark colors and a black Sharpie® on light colors.

5. Slide the clip into the channel on the Clip Plate (Figure 11).

6. Tilt up the Toe-kick and slide it back towards the cabinet until the clip starts to engage. Press firmly to secure it in position.

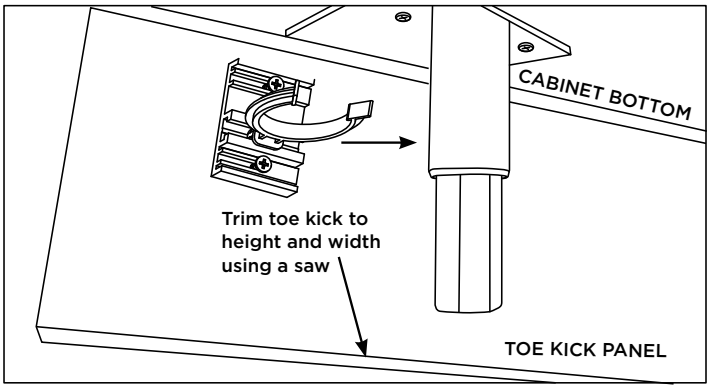

Figure 11

7. You don't need to add clips to every leg. Adding the Toe-kick clip every 30 inches is recommended in long runs.

8. Repeat this process for installing Toe-kicks to the side of the cabinets.

PRO TIP: Consider the benefits of omitting Toe-kicks for easier cleaning and maintenance while still having the option to add them later if desired. The provided stainless steel legs will create a true furniture appearance in your outdoor space.

INSTALLING A CABINET FILLER

When installing outdoor cabinet Fillers, follow these steps to ensure a perfect fit and secure attachment.

1. Verify if your design includes Fillers. Measure the actual space where the Fillers will be installed, as they might require trimming.

2. If the Fillers need to be adjusted, trim them using a table saw or miter saw. An ordinary woodworking saw can also be used for this task. Ensure precise cuts to maintain a professional appearance.

3. The Filler is intended to be installed flush with the front edge of the neighboring cabinet end panel for a seamless look.

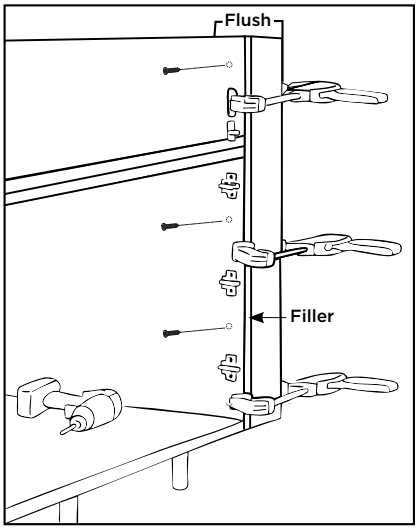

Figure 12

4. Attach the Filler to the cabinet by pre-drilling pilot holes through the cabinet box into the Filler secure with #8 x 1 1/4" stainless pan-head screws from inside the cabinet into the Filler (Figure 12).

INSTALLING A FILLER WHEN GRILL CABINETS ARE AGAINST A WALL

To prevent the grill vents from being blocked when installing cabinets against a wall, use 3"x30" Filler.

1. Using a saw, trim the Filler into three 1"x30" strips.

2. Install one strip on either side of the cabinet run using four single-hole angle brackets and 2 stainless steel 1/2" screws, making sure the Filler strip is flush with the top, (Figure 13).

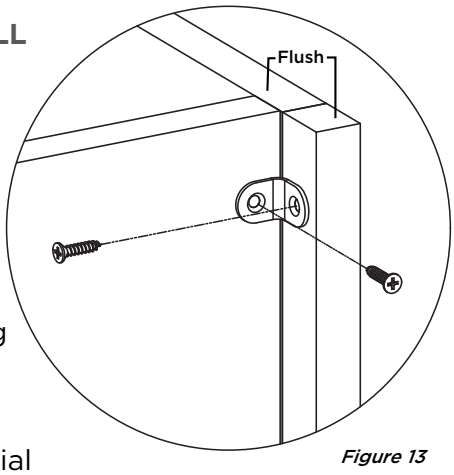

Figure 13

PRO TIP: For a successful installation on an exterior wall, it's essential to use the appropriate anchors, screws, and sealants designed for your wall applications. If you are uncertain about any part of the installation process, consider consulting a professional with experience in installing cabinets on brick walls to ensure a safe and effective installation.

INSTALLING A FINISHED OR DECORATIVE BACK PANEL

1. Retrieve the Decorative Back Panel and place it near the installation location with the finished side facing outward.

2. With the help of a second person, carefully lift the panel into position. Align the edges with the cabinet base, ensuring it sits flush and square.

PRO TIP: Using Construction Jacks can make positioning and alignment significantly easier, especially for larger panels.

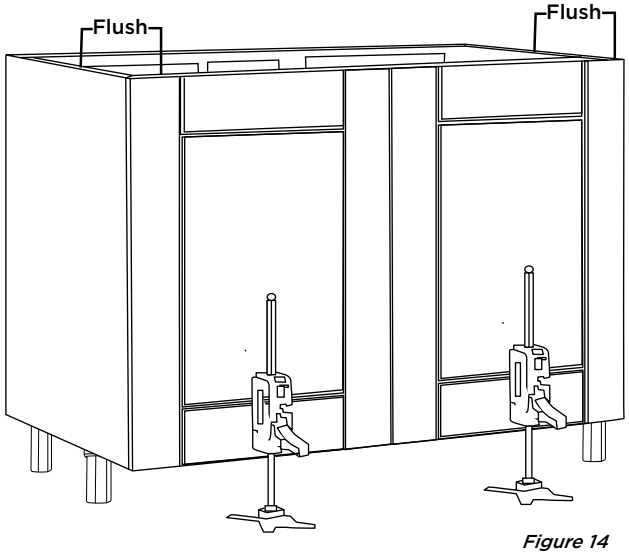

Figure 14

3. Hold or brace the panel in place while securing it temporarily with trigger clamps to prevent movement (Figure 14).

4. From inside the cabinet, drill three evenly spaced pilot holes along the top edge at points 1, 2, and 3. Install one #8 × 1-1/4" stainless steel screw into each pilot hole and tighten securely. (See Figure 15.)

5. Repeat the fastening process along the bottom inside edge at points 4, 5, and 6, and along the center edge at points 7 and 8. Ensure all fasteners are fully secured and the panel is firmly attached before removing any clamps.

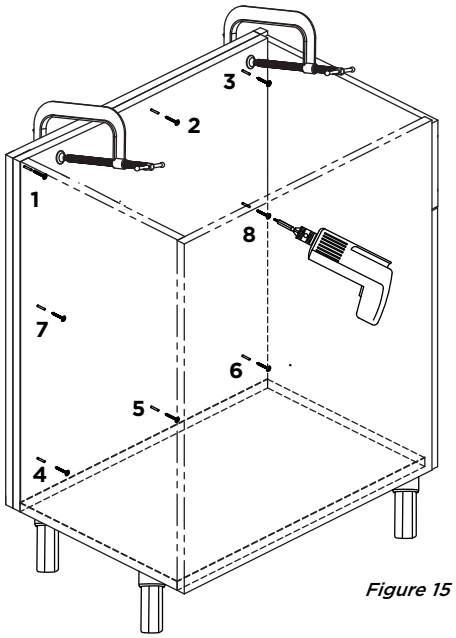

Figure 15

PRO TIP: Do not drill or drive screws into the decorative groove of the panel. Keep all fasteners within 1 inch of the top, sides, and bottom edges to avoid the groove.

COUNTERTOP INSTALLATION

Professional fabrication and installation are strongly recommended to ensure a precise fit and proper support.

Endura cabinetry includes special dog bone-shaped openings located in the front Cabinet Rail (Figure 16), designed to improve the adhesion between the countertop and the cabinet structure.

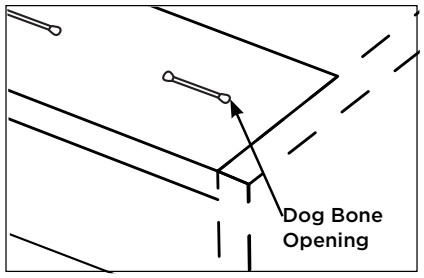

Figure 16

Before setting the countertop, fill each "dog bone" opening with a suitable countertop adhesive, such as Endura MightyTAC (EN-ADHESIVE), to create a strong and lasting bond.

ADJUSTING HINGES

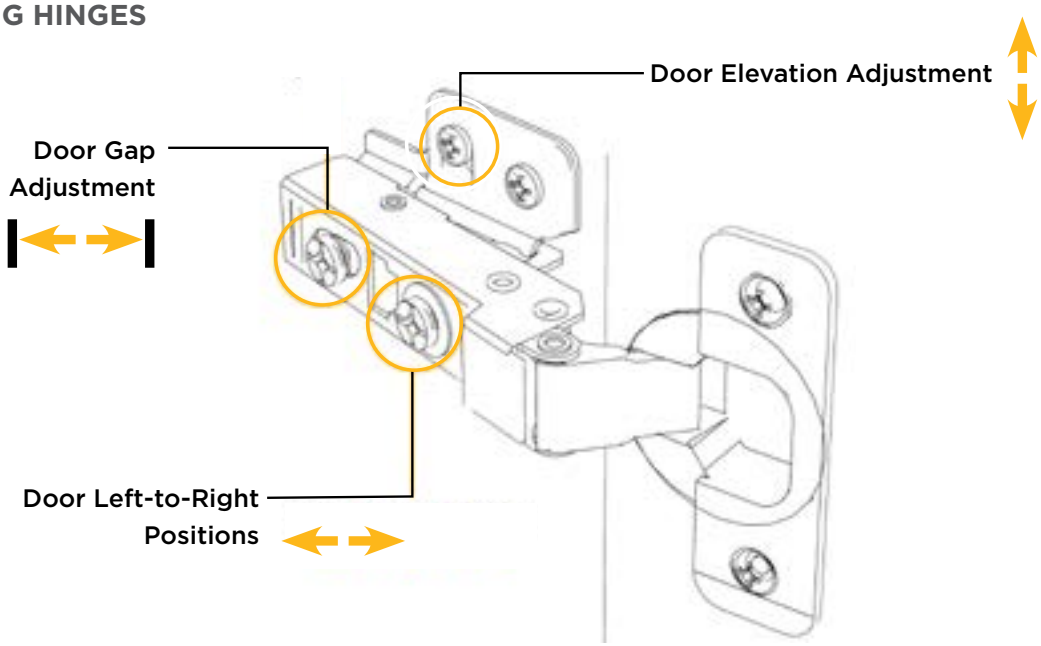

PRO TIP: Adjust doors and drawer fronts after all cabinets are installed level and secured together.

REINSTALLING DRAWERS

1. Align the drawer glide with the slot on the inside of the cabinet base.
2. Lift the drawer slightly and insert glides into the tracks on either side of the base cabinet.
3. From inside the cabinet, pull the drawer lock located at the rear of the drawer (Figure 17).
4. Push the drawer into the base, release the drawer lock, and continue to push the drawer all the way into the cabinet base.

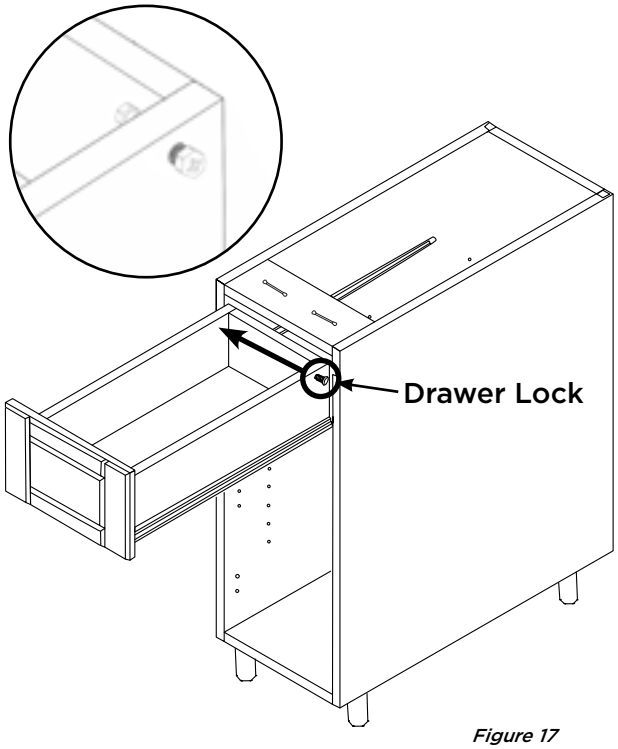

Figure 17